STERLITECH

Benchtop Filtration System
Cross Flow and Forward Osmosis

The Benchtop CF & FO Filtration System combines the latest compact, intuitive membrane filtration units to allow for nearly any membrane testing process which may be needed. This convertible configuration is the best in the lineup for PRO (Pressure Retarded Osmosis), but each unit can also be used independent of each other for CF application. Integrated with 2 high efficiency heat exchangers, MD (membrane distillation) is also within this system's capabilities. In the case of uncertainty, the Benchtop CF &FO Filtration System has everything you need, including the option to log the pressure and flow data of both units simultaneously.

Specifications

High Pressure Unit	
Cell Type	Any Cell Type up to 1812 Housing
Configuration	2 Parallel Lines
Feed Flow Rate	11.7 LPM (3.1 GPM)
Max Pressure	69 bar (1000 PSI)
Max Temperature	82 °C (180 °F)
Electrical Supply	110V or 230V, 50/60Hz, 1 Ph
Pump and Motor	Hydracell Diaphragm Pump, Washguard Motor
Data Recording	Option Available

Low Pressure Unit	
Cell Type	CF016, CF042, CF047, CF090, Sepa
Configuration	1 Line, No Bypass
Feed Flow Rate	3.2 LPM (.84 GPM)
Max Pressure	5.5 bar (80 PSI)
Max Temperature	82 °C (180 °F)
Electrical Supply	110V/230V, 50/60Hz, 1 Ph
Pump and Motor	PTFE and PEEK MicroPump
Data Recording	Option Available

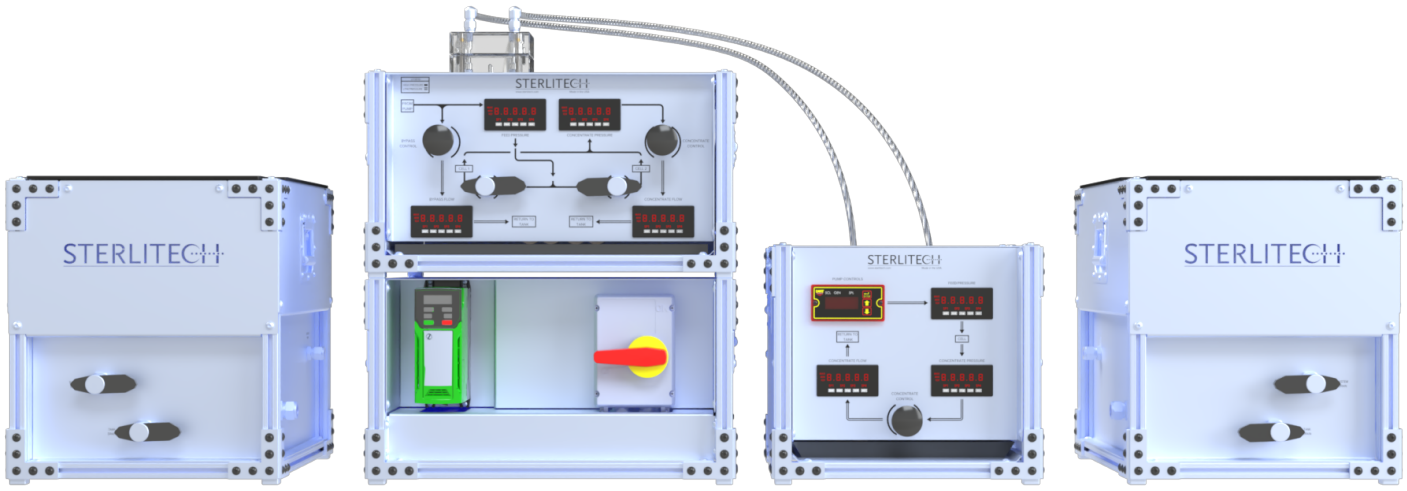

Copyright © 2025

Benchtop CF & FO Low Pressure Filtration System P&ID

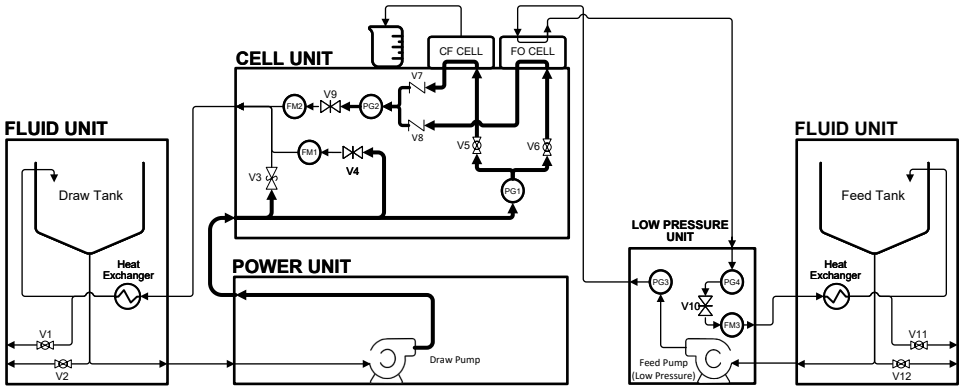

Low Pressure Fluid Line

High Pressure Fluid Line

Legend

V1	Draw System Drain Valve
V2	Draw Tank Drain Valve
V3	Pressure Relief Valve
V4	Bypass Valve
V5	Bank Selector Valve #1
V6	Bank Selector Valve #2
V7	Backflow Preventer Valve #1
V8	Backflow Preventer Valve #2
V9	Draw Pressure Control Valve
V10	Feed Pressure Control Valve
V11	Feed System Drain Valve
V12	Feed Tank Drain Valve
PG1	Draw Inlet Pressure Gauge (Digital)
PG2	Draw Outlet Pressure Gauge (Digital)
PG3	Feed Inlet Pressure Gauge (Digital)
PG4	Feed Outlet Pressure Gauge (Digital)
FM1	Bypass Flow Meter (Digital)
FM2	Draw Flow Meter (Digital)
FM3	Feed Flow Meter (Digital)

Benchtop CF & FO Filtration System Dimensions

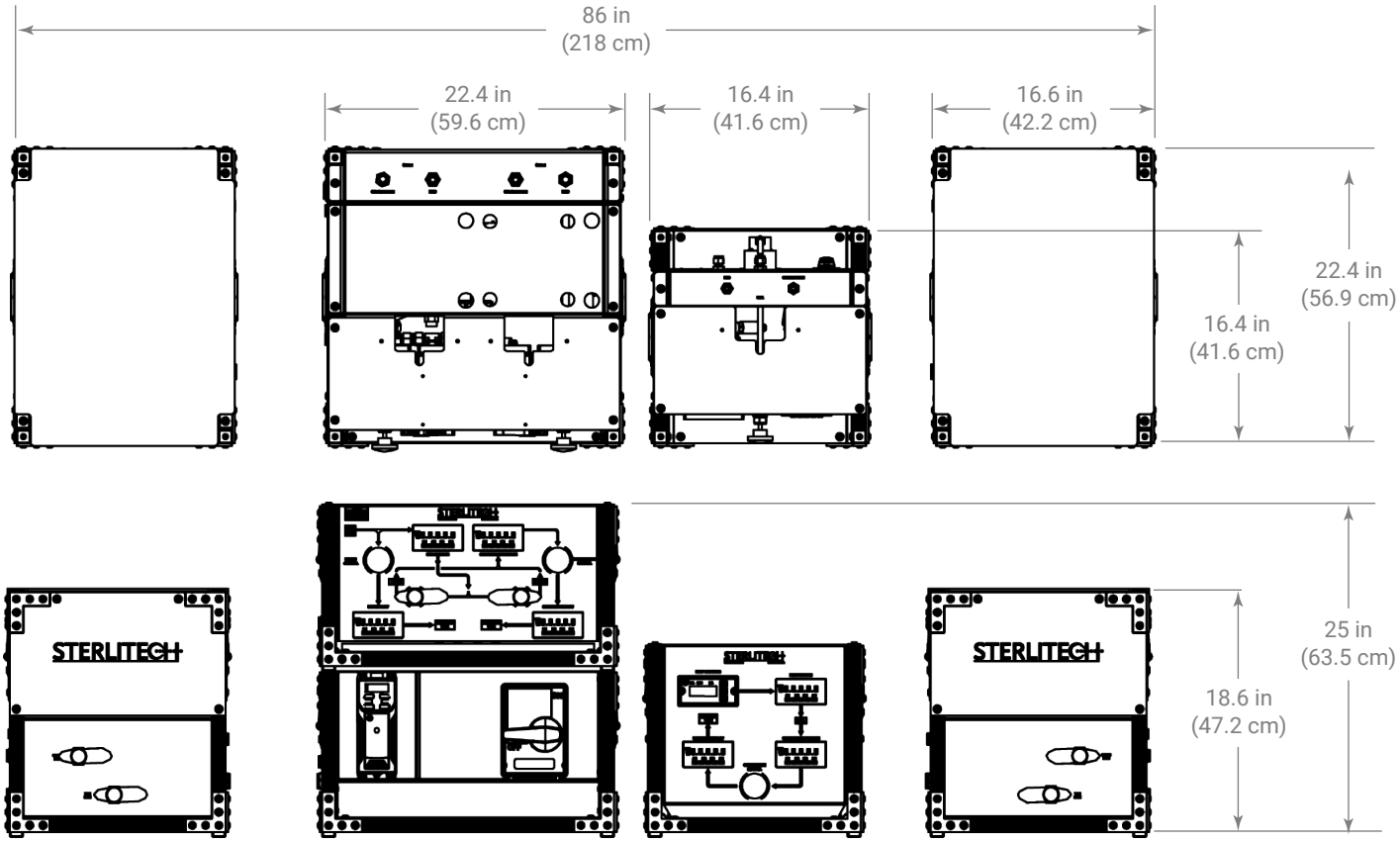

 Copyright © 2025