STERLITECH

Corporation

Benchtop Cross Flow & Forward Osmosis Filtration System

Assembly and Operation Manual

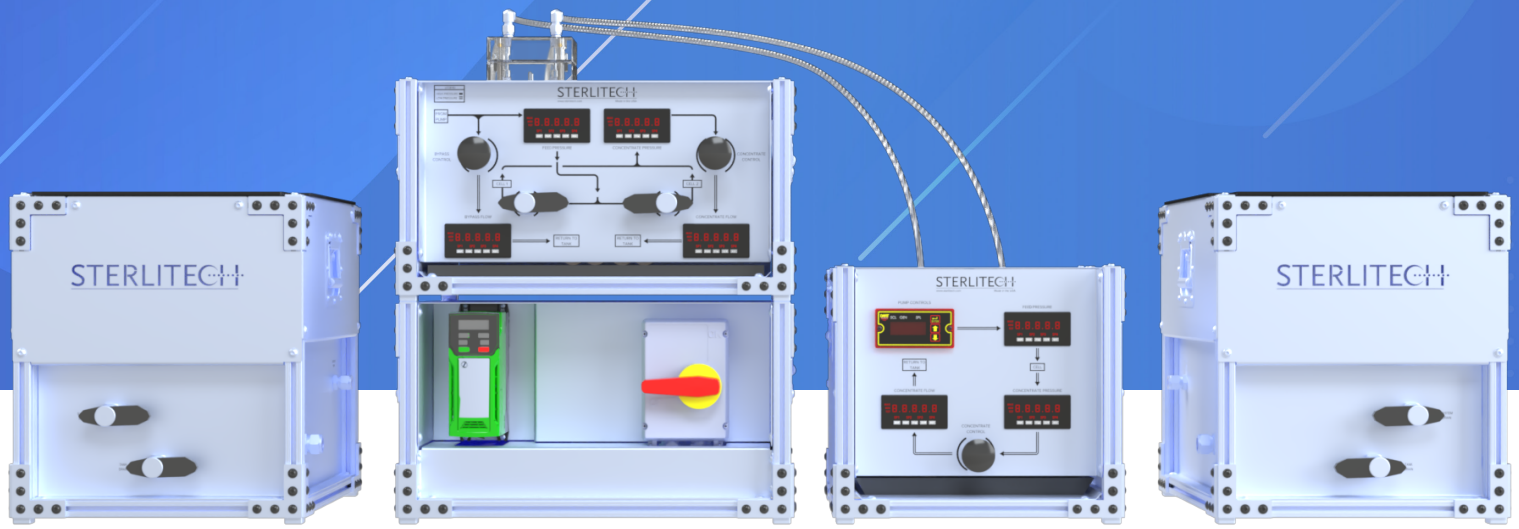

Copyright © 2025

Introduction

The Benchtop CF & FO Filtration System combines the latest compact, intuitive membrane filtration units to allow for nearly any membrane testing process which may be needed. This convertible configuration is the best in the lineup for PRO (Pressure Retarded Osmosis), but each unit can also be used independent of each other for CF application. Integrated with 2 high efficiency heat exchangers, MD (Membrane Distillation) is also within this system's capabilities. In the case of uncertainty, the Benchtop CF & FO Filtration System has everything you need, including the option to log the pressure and flow data of both units simultaneously.

System Features

SYSTEM FEATURE	HIGH PRESSURE UNIT	LOW PRESSURE UNIT
Cell Type	Any Cell Type up to 1812 Housing	CF016, CF042, CF047, CF090, Sepa
Configuration	2 Parallel Lines	1 Line, No Bypass
Feed Flow Rate	11.7 LPM (3.1 GPM)	3.2 LPM (0.84 GPM)
Max Pressure	69 bar (1000 PSI)	5.5 bar (80 PSI)
Max Temperature	82 °C (180 °F)	82 °C (180 °F)
Electrical Supply	110V, 50/60Hz, 1 Phase or 230V, 50/60Hz, 1 Phase	110V/230V, 50/60Hz, 1Ph
Motor Rating	Hydracell Diaphragm Pump, Washguard Motor	PTFE and PEEK MicroPump
Data Recording	Option Available	
Feed/Draw Tanks	316SS, Full Drain, 19 Liter (5 Gallon) Capacity	
System Dimensions	240 cm x 57 cm x 65 cm (94 in x 23 in x 26 in)	

Materials of Construction

LOCATION	MATERIALS
Pump	316L SS / FKM / Nitronic 50 / Celcon 316L SS / PTFE / PEEK
Plumbing	316 SS / FKM / FFKM / PTFE / Glass
Cell / Housing	See Housing/Cell Manual

Use this Chemical Compatibility Chart to check the compatibility of your process fluid with the wetted parts. For fluids not listed, contact Sterlitech.

Temperature Limit

The system should not be operated above 180 °F (82 °C). The membranes, feed/permeate spacers, O-rings, and cell body material may contribute to lower the actual temperature limit of the system.

**Maximum pressure and temperature ratings are dependent on a variety of factors. Listed values are guidelines based upon material properties and cannot be guaranteed in every application.*

Copyright © 2025

System Diagram

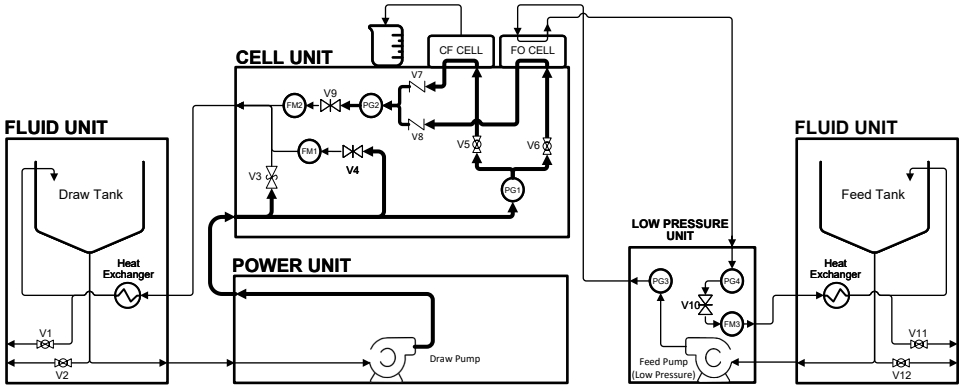

Low Pressure Fluid Line

High Pressure Fluid Line

Legend

V1	Draw System Drain Valve
V2	Draw Tank Drain Valve
V3	Pressure Relief Valve
V4	Bypass Valve
V5	Bank Selector Valve #1
V6	Bank Selector Valve #2
V7	Backflow Preventer Valve #1
V8	Backflow Preventer Valve #2
V9	Draw Pressure Control Valve
V10	Feed Pressure Control Valve
V11	Feed System Drain Valve
V12	Feed Tank Drain Valve
PG1	Draw Inlet Pressure Gauge (Digital)
PG2	Draw Outlet Pressure Gauge (Digital)
PG3	Feed Inlet Pressure Gauge (Digital)
PG4	Feed Outlet Pressure Gauge (Digital)
FM1	Bypass Flow Meter (Digital)
FM2	Draw Flow Meter (Digital)
FM3	Feed Flow Meter (Digital)

System Dimensions

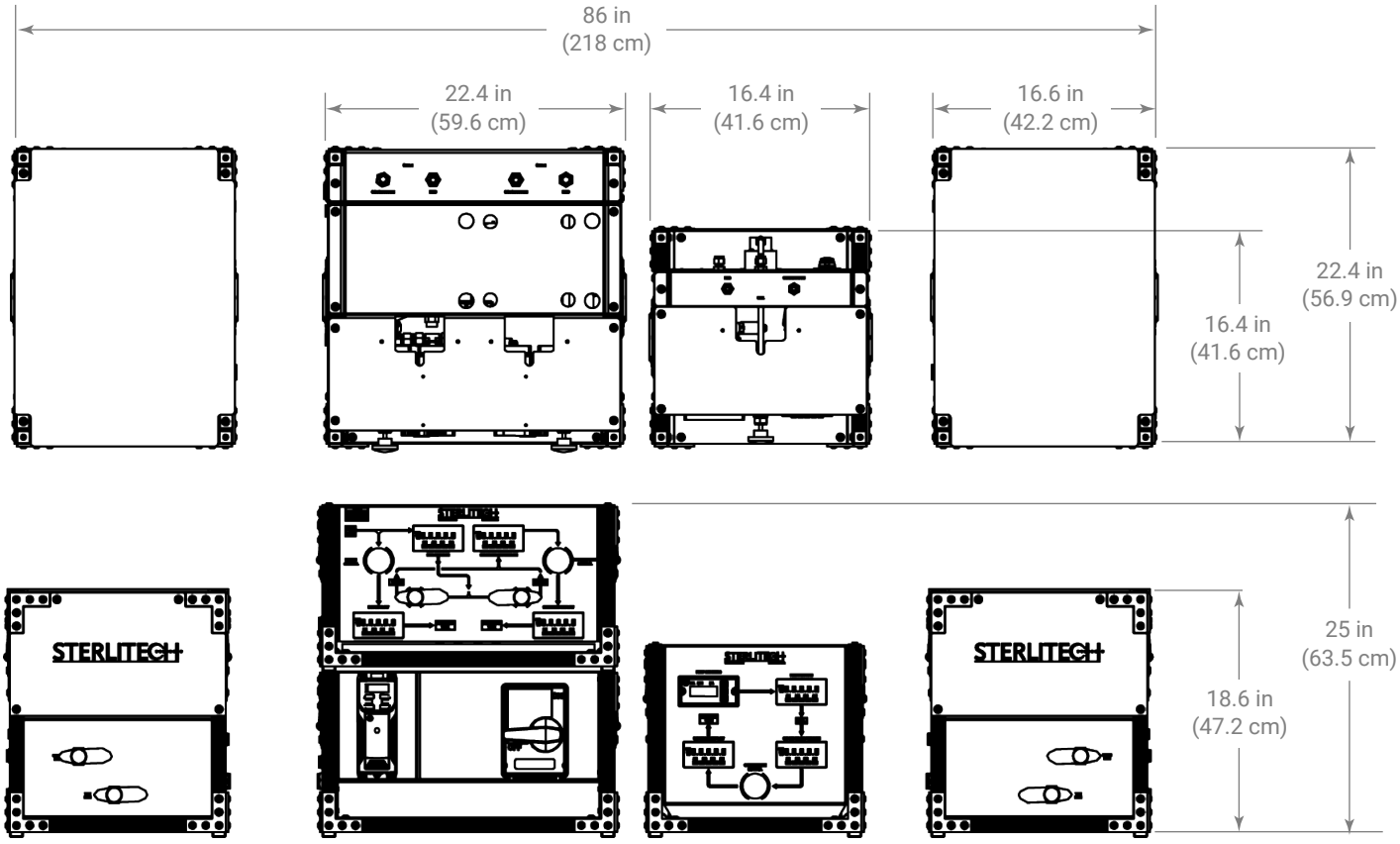

Copyright © 2025

System Overview and Feature Identification

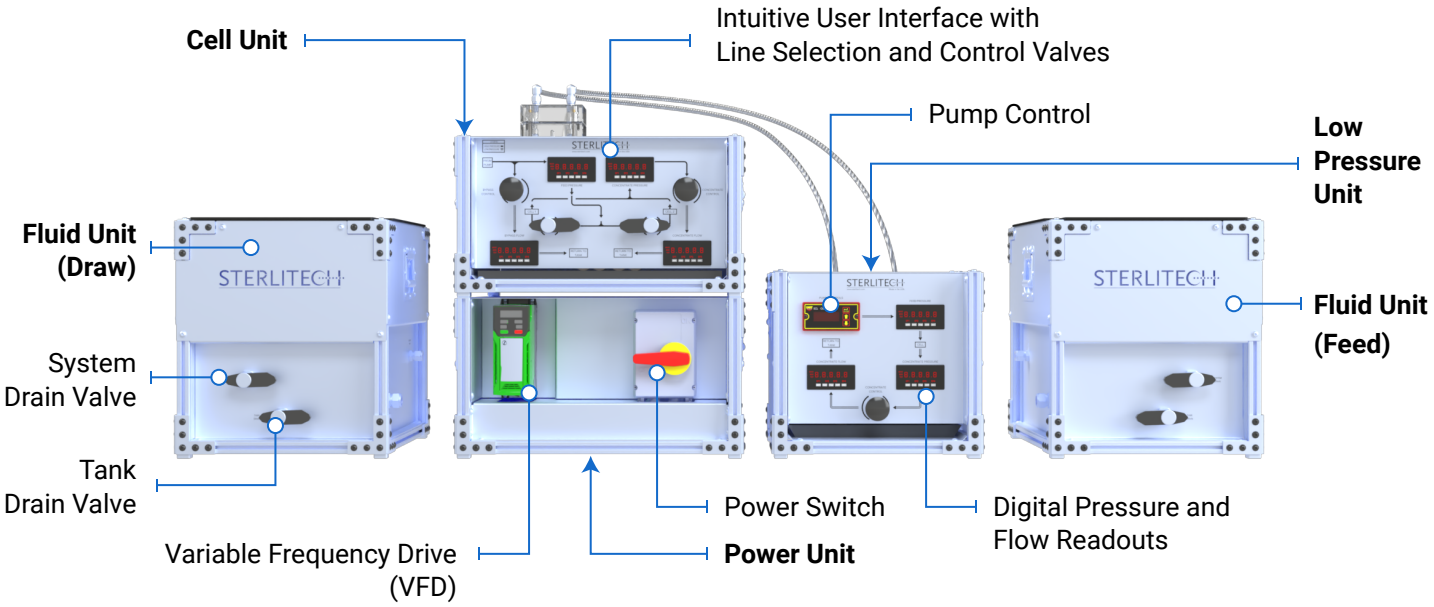

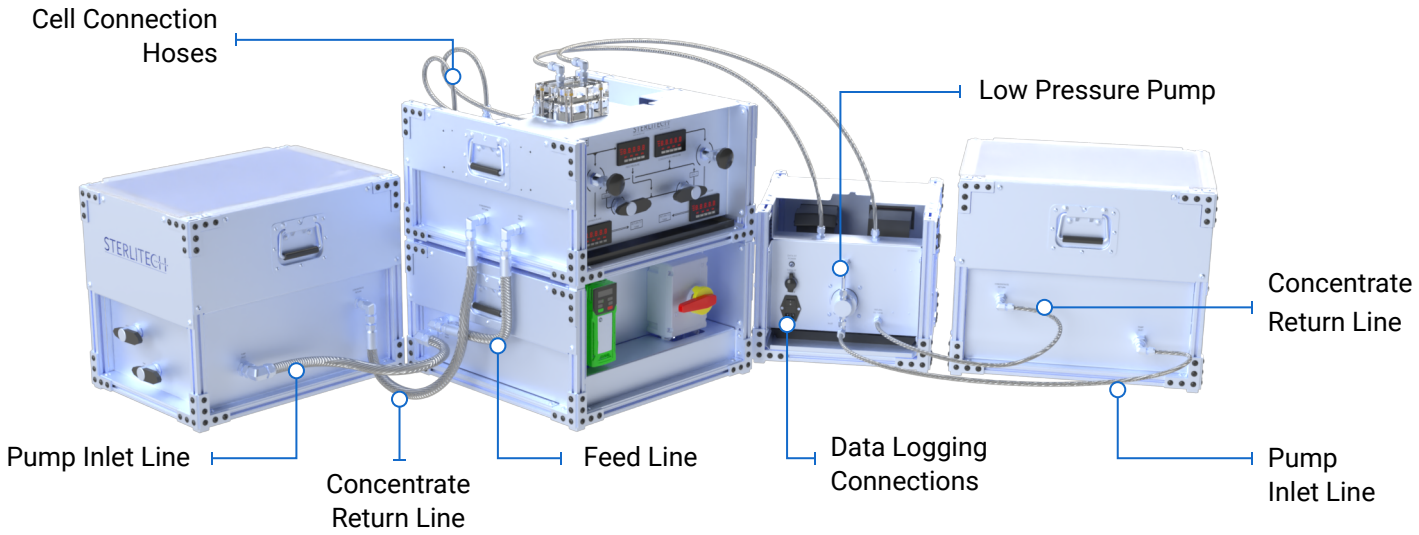

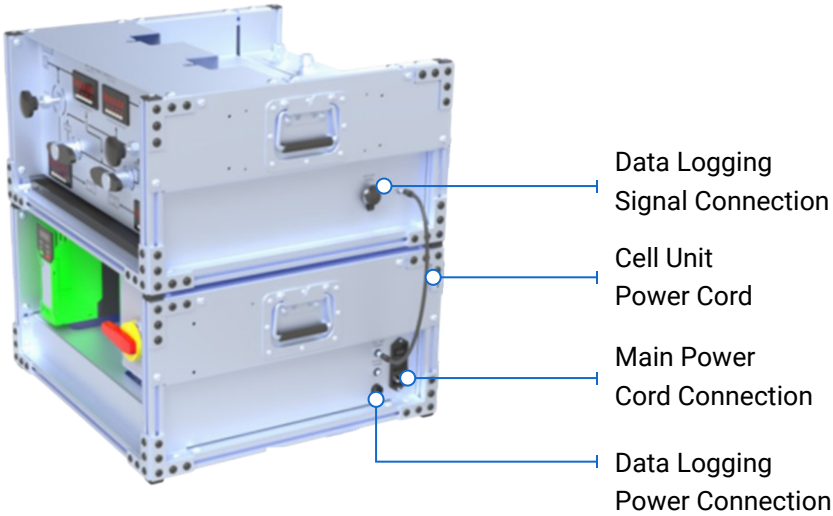

Copyright © 2025

Basic Operating Resources

[Skid System Video Resources]

Includes:

- Initial Setup
- Cell Installation
- Chiller Setup
- System Startup, Operation, and Shutdown
- Fluid Recovery Process

Additional Operation Resources

System Testing Best Practices

[CF Filtration Handbook]

Includes:

- Basics of Forward Osmosis Filtration
- FAQs
- Example Studies
- Cutting Custom Membrane Filters
- Preconditioning Membranes
- Temperature Effect on Membranes

[Compression Connection Video]

[Cutting Custom Membrane Filters]

Troubleshooting Resources

Online we have many video references should you encounter any issues with your system.
You can view these at this link: [Membrane Process and Development Channel].

Maintenance

Pump Maintenance:

Refer to the [Pump Installation and Service Manual]

General Maintenance:

Proper flushing/cleaning is recommended after each run (e.g., brackish, seawater, or organic solvents).
This will eliminate the formation of deposits/scales or corrosion of the system.

Copyright © 2025

Replacement Accessories

CELL TYPE	SPARE PARTS AVAILABLE	SPARE PARTS LINK
CF047/ CF090	Alternative O-rings	Pioneer Researcher Cells - Cross and Tangential Flow Test Cells | Sterlitech
CF016	Alternative O-rings, Shim Packs, Spacer Packs, Permeate Carrier, Membrane Cutting Die	Innovator - Cross and Tangential Flow Test Cells | Sterlitech
CF042	Alternative O-rings, Shim Packs, Spacer Packs, Permeate Carrier, Membrane Cutting Die	Explorer - Cross and Tangential Flow Test Cells | Sterlitech
Sepa	Alternative O-rings, Shim Packs, Spacer Packs, Permeate Carrier, Membrane Cutting Die, etc.	Developer - Cross and Tangential Flow Test Cells | Sterlitech

Return Material Order Procedure

If materials are to be returned to Sterlitech for repair, evaluation, or warranty consideration, a Return Material Authorization (RMA) number must be obtained from Sterlitech prior to the return. Contact Sterlitech Customer Service Department for return forms and procedures.

Be sure to include a complete, detailed written reason for the return. Also, include serial numbers, installation and removal dates, and any other pertinent information that is available. The crossflow cells have a serial number imprinted on them.

Indicate the proposed disposition of the material and reference the RMA number on all packages or cartons. All material must be shipped to Sterlitech with freight prepared by the customer.

Warranty

The following is made in lieu of all other warranties expressed or implied. Sterlitech Corporation guarantees equipment to be free from defects in material and workmanship when operated in accordance with written instructions for a period of one year from receipt. Parts not manufactured by Sterlitech are covered by their manufacturer's warranties, which are normally for one year.

For Sterlitech skids and systems, material compatibility with liquids is not covered by warranty. The end user is responsible for ensuring compatibility due to variable factors, such as the processing fluids used, operating conditions, and cleaning procedures.

The Manufacturer's and Seller's only obligation shall be to issue credit against the purchase or replacement of equipment proved to be defective in material or workmanship. Neither manufacturer nor seller shall be liable for any injury, loss or damage, direct or indirect, special or consequential, arising out of the use of, misuse, or the inability to use such product.

The information contained herein is based on technical data and tests, which we believe to be reliable, and is intended for use by persons having technical skill at their discretion and risk. Since conditions of use are outside Sterlitech's control, we can assume no liability whatsoever for results obtained or damages incurred through the application of the data presented.

This information is not intended as a license to operate under, or a recommendation to infringe upon, any patent of Sterlitech or others covering any material or use.

The foregoing may not be altered except by a written agreement signed by officers of the manufacturer.

Technical Assistance

Please contact us if you have any questions or technical inquiries about our products.

Call Sterlitech Corporation at **1-877-544-4420** or email sales@sterlitech.com.

Copyright © 2025

Company Background

Founded in 2001 in Kent, WA, Sterlitech Corporation manufactures and markets filtration-focused laboratory products to a broad spectrum of scientific and industrial sectors. Its line of flat sheet membranes and tangential flow cells deliver industry-leading performance and reliable results. Configured for reverse osmosis, nanofiltration, ultrafiltration, and microfiltration applications, Sterlitech's benchtop cross flow membrane test system provides the versatility required to innovate.

Sterlitech's comprehensive line of products is supported by the expertise of its technical specialists who can assist with application-specific product selection, and provide customized solutions where necessary. Unique problem-solving approaches, flexibility, and consistent quality have made Sterlitech Corporation a renowned global provider of filtration products and equipment.

Sales Inquiries
sales@sterlitech.com

Accounts Payable
AP@sterlitech.com

Accounts Receivable
AR@sterlitech.com

Press Inquiries
PR@sterlitech.com

STERLITECH

4620 B Street NW, Suite 101
Auburn, WA 98001 USA
Tel: 877-544-4420 or 1-253-437-0844
Fax: 1-253-437-0845
Email: info@sterlitech.com

© 2025 Sterlitech Corporation