STERLITECH Corporation

Benchtop Low Pressure Cross/Tangential Flow Filtration System Manual

Assembly and Operation Manual

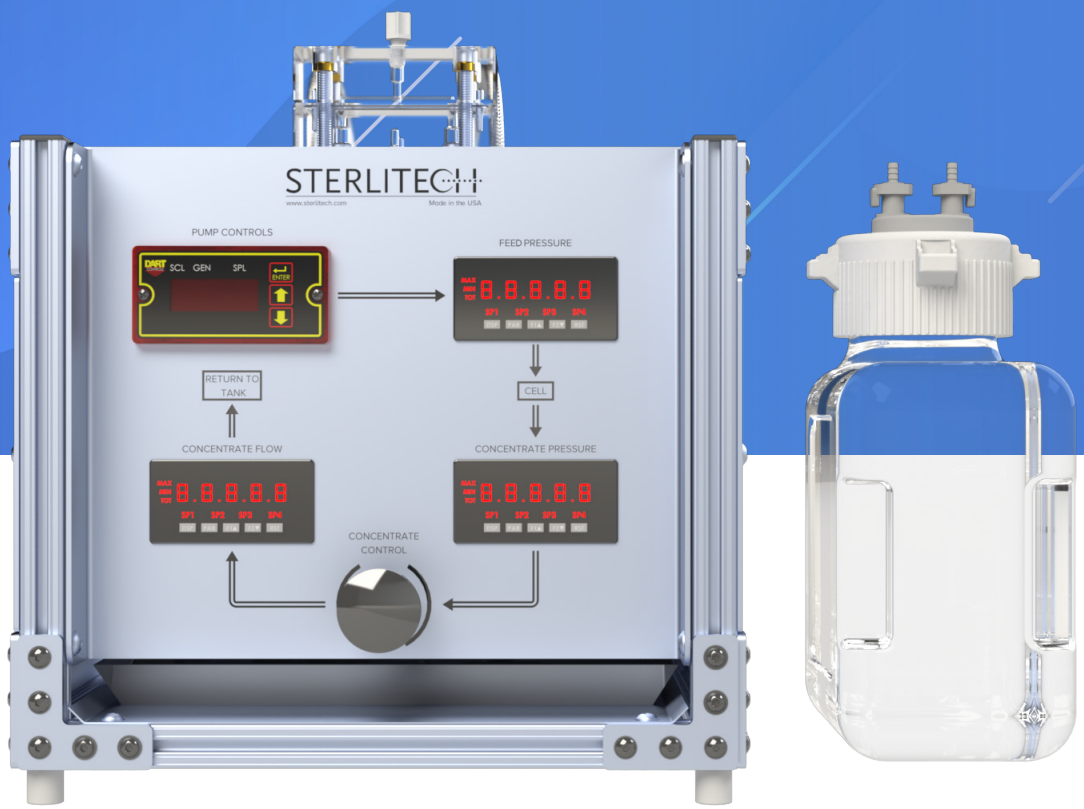

 Copyright © 2024

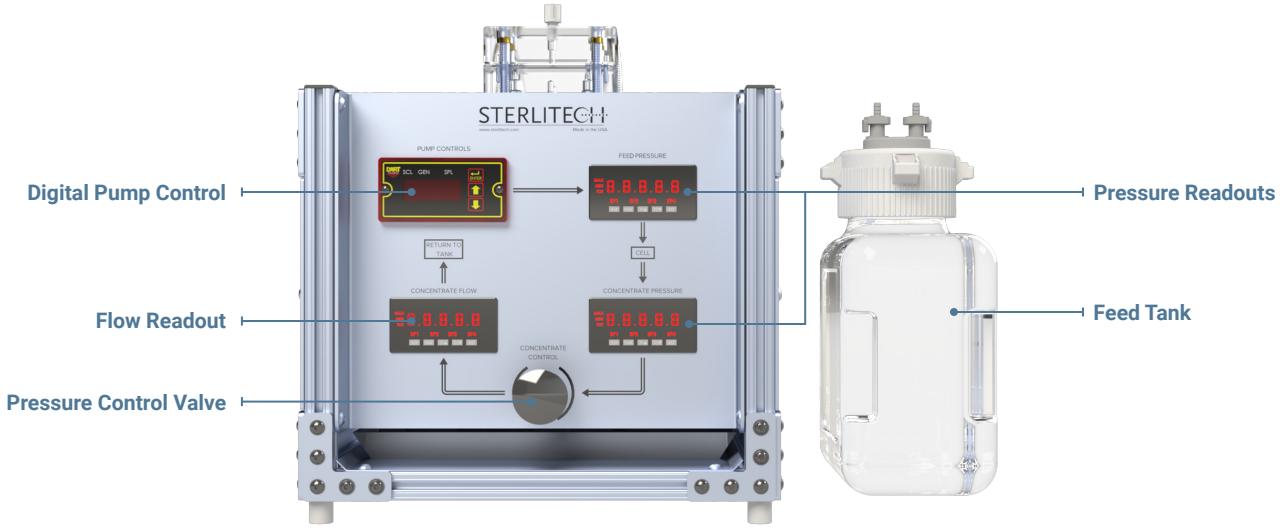

Introduction

Designed to be the most compact, versatile, and chemical-compatible system available for MF and UF experiments, the Benchtop Low Pressure Cross/Tangential Flow Filtration System can accomplish many types of tests without absorbing extra cost or space. The single unit configuration is built with the same intuitive interface as the Benchtop Cross/Tangential Flow Filtration System containing precision flow and pressure sensors with the ability to monitor and record the data with a data acquisition kit. Have worry-free compatibility with a wide variety of chemicals, as well as both 110V & 230V power.

System Features

System Feature	Description
Cell Type	Cross Flow Cells
Configuration	1 Line, No Bypass
Feed Flow Rate	3.2 LPM (0.84 GPM)
Max Pressure	5.5 bar (80 psi)
Max Temperature	82C (180F)
Electrical Supply	110V/230V, 50/60Hz, 1Ph
Motor Rating	PTFE and PEEK MicroPump
Data Recording	Option Available
Feed Tank	Polycarbonate, 10 Liter (2.5 Gallon) Capacity
System Dimensions	59 cm x 42 cm x 40 cm (24 in x 17 in x 16 in)

 Copyright © 2024

System Diagram:

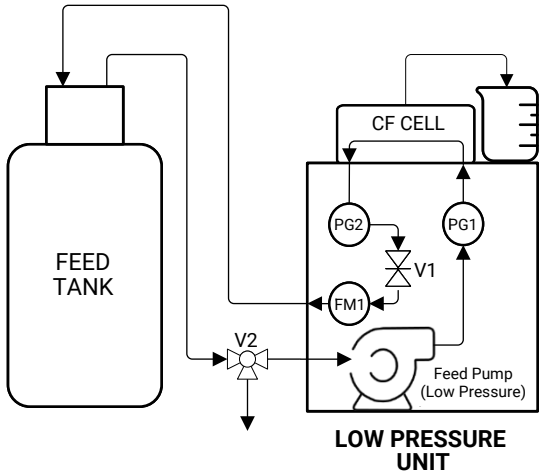

Routing Lines Key

Low Pressure Fluid Line — High Pressure Fluid Line

Legend

V1	Feed Pressure Control Valve
V2	Feed Tank Drain Valve
PG1	Feed Inlet Pressure Gauge (Digital)
PG2	Feed Outlet Pressure Gauge (Digital)
FM1	Feed Flow Meter (Digital)

Materials of Construction:

Location	Materials
Pump	316L SS / PTFE / PEEK
Plumbing	316 SS / FKM / PTFE / Glass
Cell / Housing	See Housing/Cell Manual

Use this Chemical Compatibility Chart to check the compatibility of your process fluid with the wetted parts. For fluids not listed, contact Sterlitech.

Temperature Limit:

The system should not be operated above 180 °F (82 °C). The membranes, feed/permeate spacers, O-rings, and cell body material may contribute to lower the actual temperature limit of the system.

**Maximum pressure and temperature ratings are dependent on a variety of factors. Listed values are guidelines based upon material properties and cannot be guaranteed in every application.*

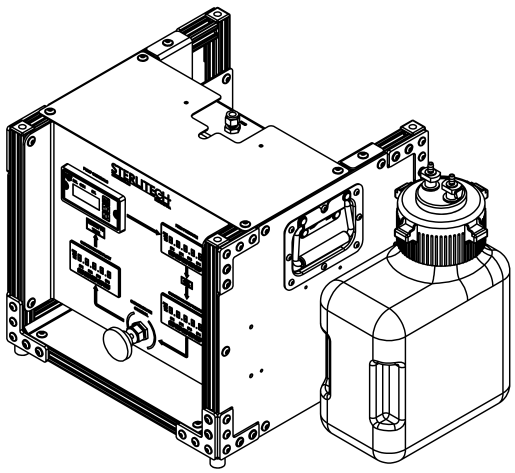

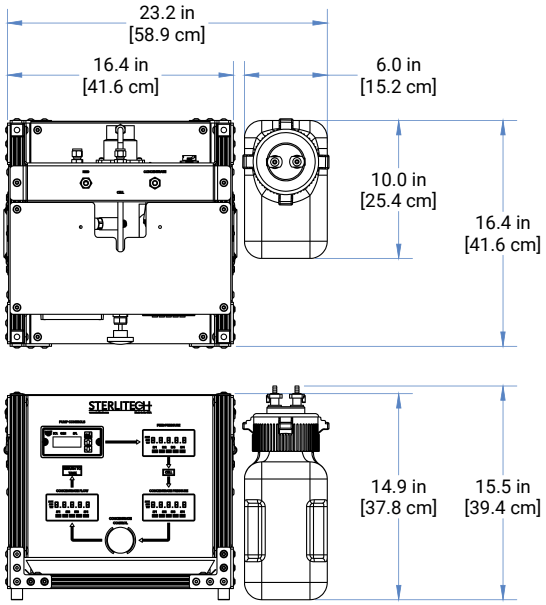

 Copyright © 2024

Basic Operating Resources

Benchtop System Video Resources

Including:

- Initial Setup
- Cell Installation (CF016/CF042)
- System Startup, Operation, and Shutdown
- Fluid Recovery Process

Additional Operation Resources:

- MPD Cell Quick Reference Guide
- CF Filtration Handbook

  Includes:
  - Basics of Cross Flow Filtration
  - FAQs
  - Example Studies
  - Cutting Custom Membrane Filters
  - Preconditioning Membranes
  - Temperature Effect on Membranes
- Compression Connection Video
- Cutting Custom Membrane Filters

Troubleshooting Resources:

Online we have many video references should you encounter any issues with your system. You can view these at this link: Membrane Process and Development Channel

Maintenance:

- **General Maintenance:** Proper flushing/cleaning is recommended after each run (e.g., brackish, seawater, or organic solvents). This will eliminate the formation of deposits/scales or corrosion of the system.

Additional Feature Identification

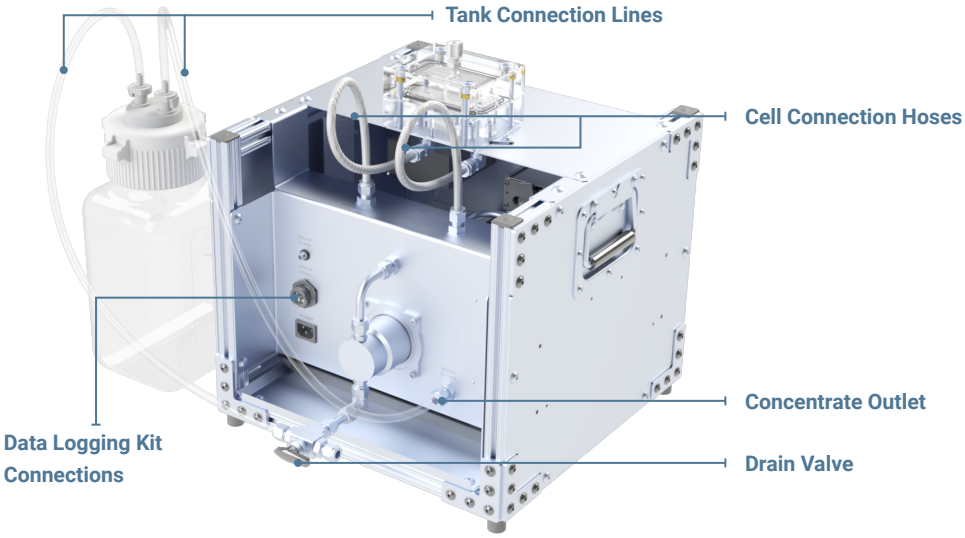

Copyright © 2024

Replacement Accessories

Cell Type	Spare Parts Available	Spare Parts Link
CF047 / CF090	Alternative O-rings	Pioneer Researcher Cells - Cross and Tangential Flow Test Cells | (sterlitech.com)
CF016	Alternative O-rings, Shim Packs, Spacer Packs, Permeate Carrier, Membrane Cutting Die	Innovator - Cross and Tangential Flow Test Cells | Sterlitech
CF042	Alternative O-rings, Shim Packs, Spacer Packs, Permeate Carrier, Membrane Cutting Die	Explorer - Cross and Tangential Flow Test Cells | Sterlitech
Sepa	Alternative O-rings, Shim Packs, Spacer Packs, Permeate Carrier, Membrane Cutting Die, etc.	Developer - Cross and Tangential Flow Test Cells | Sterlitech

Return Material Order Procedure

If materials are to be returned to Sterlitech for repair, evaluation, or warranty consideration, a Return Material Authorization (RMA) number must be obtained from Sterlitech prior to the return. Contact Sterlitech Customer Service Department for return forms and procedures.

Be sure to include a complete, detailed written reason for the return. Also, include serial numbers, installation and removal dates, and any other pertinent information that is available. The crossflow cells have a serial number imprinted on them.

Indicate the proposed disposition of the material and reference the RMA number on all packages or cartons. All material must be shipped to Sterlitech with freight prepared by the customer.

Warranty

The following is made in lieu of all other warranties expressed or implied. Sterlitech Corporation guarantees equipment to be free from defects in material and workmanship when operated in accordance with written instructions for a period of one year from receipt. Parts not manufactured by Sterlitech are covered by their manufacturer's warranties, which are normally for one year.

For Sterlitech skids and systems, material compatibility with liquids is not covered by warranty. The end user is responsible for ensuring compatibility due to variable factors, such as the processing fluids used, operating conditions, and cleaning procedures.

The manufacturer's and seller's only obligation shall be to issue credit against the purchase or replacement of equipment proved to be defective in material or workmanship. Neither manufacturer nor seller shall be liable for any injury, loss or damage, direct or indirect, special or consequential, arising out of the use of, misuse, or the inability to use such product.

The information contained herein is based on technical data and tests, which we believe to be reliable, and is intended for use by persons having technical skill at their discretion and risk. Since conditions of use are outside Sterlitech's control, we can assume no liability whatsoever for results obtained or damages incurred through the application of the data presented.

This information is not intended as a license to operate under, or a recommendation to infringe upon, any patent of Sterlitech or others covering any material or use.

The foregoing may not be altered except by a written agreement signed by officers of the manufacturer.

Technical Assistance: sales@sterlitech.com

Please contact us if you have any questions or technical inquiries about our products.

Sterlitech Corporation
4620 B Street NW, Suite 101
Auburn, WA 98001 USA
Tel: 877-544-4420 or 1-253-437-0844
Fax: 1-253-437-0845

 Copyright © 2024

Company Background

Founded in 2001 in Kent, WA, Sterlitech Corporation manufactures and markets filtration-focused laboratory products to a broad spectrum of scientific and industrial sectors. Its line of flat sheet membranes and tangential flow cells deliver industry-leading performance and reliable results. Configured for reverse osmosis, nanofiltration, ultrafiltration, and microfiltration applications, Sterlitech's benchtop cross flow membrane test system provides the versatility required to innovate.

Sterlitech's comprehensive line of products is supported by the expertise of its technical specialists who can assist with application-specific product selection and provide customized solutions where necessary. Unique problem-solving approaches, flexibility, and consistent quality have made Sterlitech

Sales Inquiries

sales@sterlitech.com

Accounts Payable

AP@sterlitech.com

Accounts Receivable

AR@sterlitech.com

Press Inquiries

PR@sterlitech.com

STERLITECH

4620 B Street NW, Suite 101
Auburn, WA 98001 USA
Tel: 877-544-4420 or 1-253-437-0844
Fax: 1-253-437-0845
Email: info@sterlitech.com

© 2024 Sterlitech Corporation